DOOR SCHEDULE

ROOM NO.	DOOR NO.	DOOR SIZE	DOOR TYPE	DOOR MATERIAL	DOOR FINISH	DOOR LOUV. SIZE	FRAME TYPE	FRAME MATERIAL	FRAME FINISH	DETAILS HEAD	DETAILS JAMB	DETAILS THRESH.	LABEL	HARDWARE	REMARKS
2001	A	EXISTING DOOR AND FRAME TO REMAIN												B1	REVERSE DOOR SWING
	B	EXISTING DOOR AND FRAME TO REMAIN													REMOVE LOCK CYLINDER
2002	A	EXISTING DOOR AND FRAME TO REMAIN												B6	REVERSE DOOR SWING
	B	EXISTING DOOR AND FRAME TO REMAIN													REMOVE LOCK CYLINDER
	C	EXISTING DOOR AND FRAME TO REMAIN													REMOVE LOCK CYLINDER
2003	A	EXISTING DOOR AND FRAME TO REMAIN												B6	REVERSE DOOR SWING
	B	EXISTING DOOR AND FRAME TO REMAIN													REMOVE LOCK CYLINDER
	C	EXISTING DOOR AND FRAME TO REMAIN													REMOVE LOCK CYLINDER
2004	A	EXISTING DOOR AND FRAME TO REMAIN												B6	REVERSE DOOR SWING
	B	EXISTING DOOR AND FRAME TO REMAIN													REMOVE LOCK CYLINDER
	C	EXISTING DOOR AND FRAME TO REMAIN													REMOVE LOCK CYLINDER
2005	A	EXISTING DOOR AND FRAME TO REMAIN													
2006	A	EXISTING DOOR AND FRAME TO REMAIN													
2007	A	(2) 3'-0" X 7'-0" X 1-3/4"	B	WD	VA		B	MTL	PRE F.	B6	B5			A1, B8, C4 D1, D4, D12	
	B	(2) 3'-0" X 7'-0" X 1-3/4"	B	WD	VA		B	MTL	PRE F.	B6	B5			A1, B8, C4 D1, D4, D12	
2008	A	EXISTING DOOR AND FRAME TO REMAIN												B1	REVERSE DOOR SWING
2009	A	EXISTING DOOR AND FRAME TO REMAIN												B6	REVERSE DOOR SWING
2010	A	EXISTING DOOR AND FRAME TO REMAIN												B6	REVERSE DOOR SWING
	B	EXISTING DOOR AND FRAME TO REMAIN													REMOVE LOCK CYLINDER
	C	EXISTING DOOR AND FRAME TO REMAIN													REMOVE LOCK CYLINDER
2011	A	EXISTING DOOR AND FRAME TO REMAIN												B6	REVERSE DOOR SWING
	B	EXISTING DOOR AND FRAME TO REMAIN													REMOVE LOCK CYLINDER
	C	EXISTING DOOR AND FRAME TO REMAIN													REMOVE LOCK CYLINDER
2012	A	EXISTING DOOR AND FRAME TO REMAIN												B6	REVERSE DOOR SWING
	B	EXISTING DOOR AND FRAME TO REMAIN													REMOVE LOCK CYLINDER
	C	EXISTING DOOR AND FRAME TO REMAIN													REMOVE LOCK CYLINDER
2013	A	EXISTING DOOR AND FRAME TO REMAIN												B1	REVERSE DOOR SWING
2014	A	EXISTING DOOR AND FRAME TO REMAIN													
2015	A	3'-0" X 7'-0" X 1-3/4"	A	WD	VA		B	MTL	PRE F.	B6	B5			A1, B7, C2 D1, D3	
2016	A	3'-0" X 7'-0" X 1-3/4"	A	WD	VA		B	MTL	PRE F.	B6	B5				
2017	A	EXISTING DOOR AND FRAME TO REMAIN													
2018	A	EXISTING DOOR AND FRAME TO REMAIN													
2019	A	(2) 3'-0" X 7'-0" X 1-3/4"	B	WD	VA		B	MTL	PRE F.	B6	B5			A1, B8, C4 D1, D4, D12	
	B	3'-8" X 7'-0" X 1-3/4"	A	WD	VA		C	MTL	PRE F.	B6	B5			A1, B8, C4 D1, D4, D12	EXISTING DOOR LEAF RELOCATED
	C	3'-0" X 7'-0" X 1-3/4"	B	WD	VA		A	MTL	PRE F.	B6	B5			A1, B8, C4 D1, D4, D12	
2020	A	EXISTING DOOR AND FRAME TO REMAIN													
2021	A	EXISTING DOOR AND FRAME TO REMAIN													
2022	A	EXISTING DOOR AND FRAME TO REMAIN													
	B	EXISTING DOOR AND FRAME TO REMAIN													
2023	A	EXISTING DOOR AND FRAME TO REMAIN													
2024	A	EXISTING DOOR AND FRAME TO REMAIN													
2025	A	EXISTING DOOR AND FRAME TO REMAIN													
2026	A	EXISTING DOOR AND FRAME TO REMAIN													
2027	A	EXISTING DOOR AND FRAME TO REMAIN													
	B	EXISTING DOOR AND FRAME TO REMAIN													
2028	A	EXISTING DOOR AND FRAME TO REMAIN													
2029	A	EXISTING DOOR AND FRAME TO REMAIN													
2030	A	(2) 3'-0" X 7'-0" X 1-3/4"	B	WD	VA		B	MTL	PRE F.	B6	B5			A1, B8, C4 D1, D4, D12	
2031	A	EXISTING DOOR AND FRAME TO REMAIN													
2032	A	EXISTING DOOR AND FRAME TO REMAIN													
2033	A	EXISTING DOOR AND FRAME TO REMAIN													
2034	A	EXISTING DOOR AND FRAME TO REMAIN													
2035	A	EXISTING DOOR AND FRAME TO REMAIN													
2036	A	EXISTING DOOR AND FRAME TO REMAIN													
	B	EXISTING DOOR AND FRAME TO REMAIN													
2037	A	EXISTING DOOR AND FRAME TO REMAIN													
	B	EXISTING DOOR AND FRAME TO REMAIN													
	C	EXISTING DOOR AND FRAME TO REMAIN													
	D	EXISTING DOOR AND FRAME TO REMAIN													
2038	A	EXISTING DOOR AND FRAME TO REMAIN													
2039	A	EXISTING DOOR AND FRAME TO REMAIN													
2040	A	EXISTING DOOR AND FRAME TO REMAIN													
2041	A	EXISTING DOOR AND FRAME TO REMAIN													
2042	A	EXISTING DOOR AND FRAME TO REMAIN													
2043	A	EXISTING DOOR AND FRAME TO REMAIN													
2044	A	EXISTING DOOR AND FRAME TO REMAIN													
2045	A	EXISTING DOOR AND FRAME TO REMAIN													
2046	A	EXISTING DOOR AND FRAME TO REMAIN													
2047	A	EXISTING DOOR AND FRAME TO REMAIN													
2048	A	EXISTING DOOR RELOCATED					A	MTL	PRE F.	B6	B5				
2049	A	EXISTING DOOR AND FRAME TO REMAIN													
2050	A	EXISTING DOOR AND FRAME TO REMAIN													
2051	A	EXISTING DOOR AND FRAME TO REMAIN													
2052	A	EXISTING DOOR AND FRAME TO REMAIN													
2053	A	EXISTING DOOR AND FRAME TO REMAIN													
2056	A	EXISTING DOOR AND FRAME TO REMAIN													
2057	A	EXISTING DOOR AND FRAME TO REMAIN													
	B	EXISTING DOOR AND FRAME TO REMAIN													
2058	A	EXISTING DOOR AND FRAME TO REMAIN													
	B	EXISTING DOOR AND FRAME TO REMAIN													
2059	A	EXISTING DOOR AND FRAME TO REMAIN													
2060	A	EXISTING DOOR AND FRAME TO REMAIN													
2061	A	EXISTING DOOR AND FRAME TO REMAIN													
2062	A	EXISTING DOOR AND FRAME TO REMAIN													
2063	A	3'-0" X 7'-0" X 1-3/4"	B	WD	VA		A	MTL	PRE F.	B6	B5			A1, B6, D1, D3	
2064	A	EXISTING DOOR AND FRAME TO REMAIN													
2066	A	EXISTING DOOR AND FRAME TO REMAIN													
2067	A	(2) 3'-0" X 7'-0" X 1-3/4"	B	WD	VA		B	MTL	PRE F.	B6	B5			A1, B8, C4 D1, D4, D12	
	B	(2) 3'-0" X 7'-0" X 1-3/4"	B	WD	VA		B	MTL	PRE F.	B6	B5			A1, B8, C4 D1, D4, D12	
	C	(2) 3'-0" X 7'-0" X 1-3/4"	B	WD	VA		B	MTL	PRE F.	B6	B5			A1, B8, C4 D1, D4, D12	
	D	3'-0" X 7'-0" X 1-3/4"	B	WD	VA		A	MTL	PRE F.	B6	B5			A1, B8, C4 D1, D4, D12	
	E	3'-0" X 7'-0" X 1-3/4"	B	WD	VA		A	MTL	PRE F.	B6	B5			A1, B8, C4 D1, D4, D12	
2068	A	EXISTING DOOR AND FRAME TO REMAIN													
2069	A	EXISTING DOOR AND FRAME TO REMAIN													
2070	A	EXISTING DOOR AND FRAME TO REMAIN													
2071	A	EXISTING DOOR AND FRAME TO REMAIN													
2073	A	EXISTING DOOR AND FRAME TO REMAIN													
	B	EXISTING DOOR AND FRAME TO REMAIN													
2074	A	EXISTING DOOR AND FRAME TO REMAIN													
2075	A	3'-0" X 7'-0" X 1-3/4"	B	WD	VA		A	MTL	PRE F.	B6	B5			A1, B6, D1, D4,	
2076	A	EXISTING DOOR AND FRAME TO REMAIN													
2077	A	EXISTING DOOR AND FRAME TO REMAIN													
2078	A	3'-0" X 7'-0" X 1-3/4"	A	WD	VA		A	MTL	PRE F.	B6	B5			A1, B4, D1, D4,	
2079	A	EXISTING DOOR AND FRAME TO REMAIN													
2080	A	EXISTING DOOR AND FRAME TO REMAIN													
	B	EXISTING DOOR AND FRAME TO REMAIN													
2081	A	EXISTING DOOR AND FRAME TO REMAIN													
2082	A	EXISTING DOOR AND FRAME TO REMAIN													
2083	A	EXISTING DOOR AND FRAME TO REMAIN													
2084	A	EXISTING DOOR AND FRAME TO REMAIN													
2085	A	EXISTING DOOR AND FRAME TO REMAIN													
	B	EXISTING DOOR AND FRAME TO REMAIN													
2086	A	EXISTING DOOR AND FRAME TO REMAIN													
	B	EXISTING DOOR AND FRAME TO REMAIN													
2087	A	EXISTING DOOR AND FRAME TO REMAIN													
	B	EXISTING DOOR AND FRAME TO REMAIN													
2089	A	EXISTING DOOR AND FRAME TO REMAIN													
	B	EXISTING DOOR AND FRAME TO REMAIN													
	C	EXISTING DOOR AND FRAME TO REMAIN													
	D	EXISTING DOOR AND FRAME TO REMAIN													
2090	A	EXISTING DOOR AND FRAME TO REMAIN													
	B	EXISTING DOOR AND FRAME TO REMAIN													
2092	A	3'-0" X 7'-0" X 1-3/4"	A	WD	VA		A	MTL	PRE F.	B6	B5			A1, C1, D1, D3, D11, D12	
2093	A	EXISTING DOOR AND FRAME TO REMAIN													
2096	A	EXISTING DOOR AND FRAME TO REMAIN													
2099	A	EXISTING DOOR AND FRAME TO REMAIN													
	B	EXISTING DOOR AND FRAME TO REMAIN													
2100	A	EXISTING DOOR AND FRAME TO REMAIN													
	B	EXISTING DOOR AND FRAME TO REMAIN													
2101	A	EXISTING DOOR AND FRAME TO REMAIN													
	B	EXISTING DOOR AND FRAME TO REMAIN													
2103	A	EXISTING DOOR AND FRAME TO REMAIN													
2104	A	EXISTING DOOR AND FRAME TO REMAIN													
2105	A	(2) 3'-0" X 7'-0" X 1-3/4"	B	WD	VA		B	MTL	PRE F.	B6	B5			A1, B8, C4 D1, D4, D12	
	B	EXISTING DOOR AND FRAME TO REMAIN													
2106	A	EXISTING DOOR AND FRAME TO REMAIN													
	B	EXISTING DOOR AND FRAME TO REMAIN													
2107	A	EXISTING DOOR AND FRAME TO REMAIN													
2108	A	EXISTING DOOR AND FRAME TO REMAIN													
2109	A	EXISTING DOOR AND FRAME TO REMAIN													
2110	A	EXISTING DOOR AND FRAME TO REMAIN													
2112	A	EXISTING DOOR AND FRAME TO REMAIN													
2113	A	3'-0" X 7'-0" X 1-3/4"	A	WD	VA		A	MTL	PRE F.	B6	B5			A1, B6, D1, D4,	
2114	A	EXISTING DOOR AND FRAME TO REMAIN													
	B	3'-0" X 7'-0" X 1-3/4"	A	WD	VA		A	MTL	PRE F.	B6	B5			A1, B6, D1, D4,	
2115	A	3'-0" X 7'-0" X 1-3/4"	A	WD	VA		A	MTL	PRE F.	B6	B5			A1, B4,C1 D1, D4,	
2116	A	EXISTING DOOR AND FRAME TO REMAIN													
2117	A	EXISTING DOOR AND FRAME TO REMAIN													
2118	A	EXISTING DOOR AND FRAME TO REMAIN													
2119	A	EXISTING DOOR AND FRAME TO REMAIN													
2121	A	EXISTING DOOR AND FRAME TO REMAIN													REVERSE DOOR SWING
	B	3'-0" X 7'-0" X 1-3/4"	A	WD	VA		A	MTL	PRE F.	B6	B5			A1, B6, D1, D4,	
2122	A	EXISTING DOOR AND FRAME TO REMAIN													
2123	A	EXISTING DOOR AND FRAME TO REMAIN													
2127	A	EXISTING DOOR AND FRAME TO REMAIN													
2128	A	EXISTING DOOR AND FRAME TO REMAIN													
2129	A	EXISTING DOOR AND FRAME TO REMAIN													
	B	EXISTING DOOR AND FRAME TO REMAIN													REMOVE LOCK CYLINDER
2130	A	EXISTING DOOR AND FRAME TO REMAIN													
2131	A	EXISTING DOOR AND FRAME TO REMAIN													
	B	EXISTING DOOR AND FRAME TO REMAIN													REMOVE LOCK CYLINDER
2132	A	EXISTING DOOR AND FRAME TO REMAIN													
	B	EXISTING DOOR AND FRAME TO REMAIN													
2133	A	EXISTING DOOR AND FRAME TO REMAIN													
	B	EXISTING DOOR AND FRAME TO REMAIN													REMOVE LOCK CYLINDER
2134	A	EXISTING DOOR AND FRAME TO REMAIN													
	B	EXISTING DOOR AND FRAME TO REMAIN													REMOVE LOCK CYLINDER
2135	A	EXISTING DOOR AND FRAME TO REMAIN													
	B	EXISTING DOOR AND FRAME TO REMAIN													REMOVE LOCK CYLINDER
2136	A	EXISTING DOOR AND FRAME TO REMAIN													
2137	A	EXISTING DOOR AND FRAME TO REMAIN													
2138	A	EXISTING DOOR AND FRAME TO REMAIN													
	B	EXISTING DOOR AND FRAME TO REMAIN													
2139	A	EXISTING DOOR AND FRAME TO REMAIN													
	B	EXISTING DOOR AND FRAME TO REMAIN													REMOVE LOCK CYLINDER
2140	A	EXISTING DOOR AND FRAME TO REMAIN													
	B	EXISTING DOOR AND FRAME TO REMAIN													REMOVE LOCK CYLINDER
2141	A	EXISTING DOOR AND FRAME TO REMAIN													
	B	EXISTING DOOR AND FRAME TO REMAIN													
2142	A	EXISTING DOOR AND FRAME TO REMAIN													
	B	EXISTING DOOR AND FRAME TO REMAIN													REMOVE LOCK CYLINDER
2143	A	EXISTING DOOR AND FRAME TO REMAIN													
2144	A	EXISTING DOOR AND FRAME TO REMAIN													
2145	A	EXISTING DOOR AND FRAME TO REMAIN													
2146	A	EXISTING DOOR AND FRAME TO REMAIN													
2147	A	EXISTING DOOR AND FRAME TO REMAIN													
	B	EXISTING DOOR AND FRAME TO REMAIN													
2148	A	EXISTING DOOR AND FRAME TO REMAIN													
2149	A	EXISTING DOOR AND FRAME TO REMAIN													
2150	A	EXISTING DOOR AND FRAME TO REMAIN													REMOVE LOCK CYLINDER
2151	A	EXISTING DOOR AND FRAME TO REMAIN													

DOOR TYPES

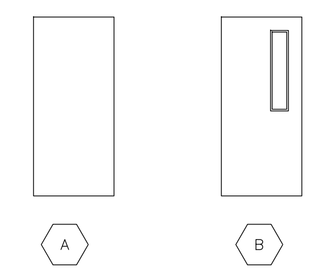

FRAME TYPE

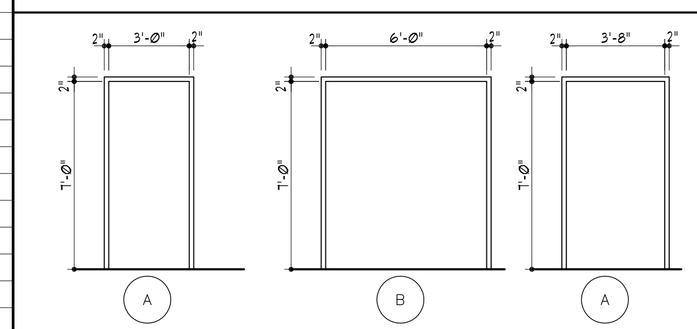

HARDWARE SCHEDULE

A-HINGES	HAGER STEEL	C-CLOSERS	LCN SMOOTHEE SERIES	D - MISCELLANEOUS	SATIN STAINLESS STEEL FINISH AS AVAILABLE
A1	1 1/2 PAIR BB 1279, 4 1/2 X 4 1/2	C1	PULL SIDE, 4110	D1	SILENCERS GLYNN JOHNSON 64
A2	1 1/2 PAIR BB 1279, 4 1/2 X 4 1/2	C2	PUSH SIDE, 4010	D2	DOOR STOP, CONCAVE - ROCKWOOD 446D
B- LATCHES	SCHLAGE D SERIES W/ ATHENS LEVER 620 SATIN ST. STL. FINISH. KEYED PER OWNER REQUIREMENTS	C3	EXTERIOR, 4114 CUSH	D3	DOOR STOP, CONVEX - ROCKWOOD 442
		C4	PAIR OF C2 CLOSERS	D4	DOOR STOP, FLOOR MOUNT - ROCKWELL 441
		C5	PAIR OF C1 CLOSERS	D5	PERIMETER SEAL, NATIONAL GUARD 133N DK B
B1	ENTRY / OFFICE FUNCTION, D510PD	C6	PUSH SIDE, 4110 W/ DELAY	D6	THRESHOLD, NAT. GUARD 896N DK B, 5" X DOOR WIDTH
B2	EXIT FUNCTION, D112			D7	THRESHOLD, WHITE MARBLE 6" X 1/2" X DOOR WIDTH
B3	CORRIDOR FUNCTION, D73PD			D8	ALUM DOOR WEATHERSEAL, DOOR MFR. STANDARD
B4	STOREROOM FUNCTION, D56PD			D9	BI FOLD DOOR HDWR. STANLEY SERIES 2600, 4484 DOOR PULL
B5	PASSAGE FUNCTION, D100			D10	ALUM DOOR PUSH-PULL: KAWNEER STYLE CP11 / CO-9
B6	CLASSROOM FUNCTION, D54PD			D11	DOOR SWEEP, NATIONAL GUARD 2601N DK B
B7	PRIVACY FUNCTION, D446D			D12	PUSH-PULL: ROCKWOOD 70D / 101X70D
B8	VAN DUPREN - SERIES 33/35 EXIT DEVICE			D13	KICK PLATE - ROCKWOOD K1062 - 10" H x DOOR WIDTH
B9	MANUAL FLUSH BOLT - ROCKWOOD 556D SERIES				
B10	AUTOMATIC FLUSH BOLT - ROCKWOOD 1800D/1880D SERIES				

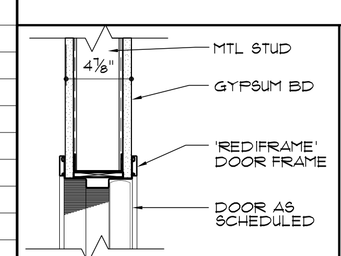

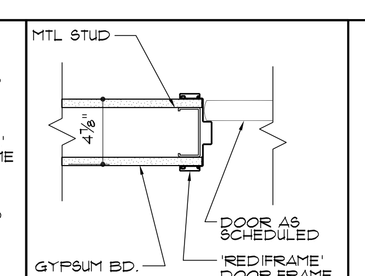

B6	HEAD	B5	JAMB
1-1/2" = 1'-0"	DRHD02	1-1/2" = 1'-0"	DRJB02

EQUITIES GROUP

ISSUED FOR	DATE
PERMIT	03/22/08

OAKLAND UNIVERSITY NURSING SCHOOL

RIVERVIEW CAMPUS
DETROIT MICHIGAN

THIS DRAWING AND DESIGN ARE THE PROPERTY OF AE EQUITIES GROUP THEY ARE SUBMITTED ON THE CONDITION THAT THEY ARE NOT TO BE USED, REPRODUCED, OR COPIED, IN WHOLE OR IN PART, OR USED FOR FURNISHING INFORMATION TO OTHERS WITHOUT THE PRIOR WRITTEN CONSENT OF AE EQUITIES GROUP. ALL COMMON LAW RIGHTS OF COPYRIGHT AND OTHERWISE ARE HEREBY SPECIFICALLY RESERVED

COPYRIGHT © 2008
AE EQUITIES GROUP

PAUL FRITZ ASSOCIATES
ARCHITECTURE AND PLANNING
21604 SHADY LANE
SAINT CLAIR SHORES, MICHIGAN 48080

DRAWN BY PBF
CHECKED .
APPROVED

STATE OF MICHIGAN LICENSE 35743
EXPIRES OCTOBER 31, 2008

DO NOT SCALE DRAWINGS

SHEET NAME
DOOR SCHEDULE DETAILS
.

SHEET NUMBER
A702

PROJECT NUMBER
080102